CCNT-040-026-015-LFBL

Nanocrystalline toroidal core 40x26x15 mm

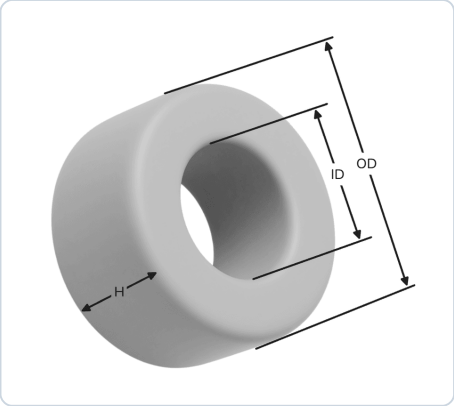

DIMENSIONS

Parameter	Bare (mm)	Cased (mm)
Outside diameter (OD)	40	40.8
Inside diameter (ID)	26	25.7
Height (H)	15	15.5

Dimensions Summary: Bare OD 40mm x ID 26mm x H 15mm; Cased OD 40.8mm x ID 25.7mm x H 15.5mm

Finished tolerance: 0.4mm

Case marking uses bare core dimensions.

CORE PROPERTIES

A_{Fe} 0.86 cm^2	L_{Fe} 10.37 cm	Bs 1.25 T	μi 50,000 (nominal)
Working temp –40°C – +150°C	Curie 560 °C	Casing Powder Coating	Weight 72 g

INDUCTANCE FACTOR AL (μH/N²)

1kHz @ 0.3V, N=1 (μH/N²)	10kHz @ 0.3V, N=1 (μH/N²)	100kHz @ 0.3V, N=1 (μH/N²)
18	15.5	4

DESIGN NOTE

Published AL is one turn through the window (Kelvin clips) at 0.3 V, not a 2 mT small-signal AL. At 1 kHz this drive saturates the smaller cores. Estimate inductance as L ≈ AL × N² on a wound part, then verify. Size the winding to the finished inside diameter when it is published, not the bare ID. Keep peak flux within 1.25 T. The finish is powder coating; keep continuous duty within the coating rating.

RECOMMENDED USAGE

Current Transformers | Ground-Fault Sensing | Prototype Magnetics

DIY AND R&D

Diy Current-Sensing Builds | Benchtop Transformer Prototyping | Hobbyist Magnetics Experiments

TECHNICAL APPLICATIONS

Current Transformers (powder-Coated Lf Toroid) | Ground-Fault Sensing (powder-Coated Lf Toroid) | Prototype Magnetics (powder-Coated Lf Toroid)

DOCUMENT CONTROL

Author	Created	Approver	Approved
Aditya R.	30 May 2026	Mahavir S.	18 Jun 2026